Installation, Operation & Maintenance

210-991-2400E

Hydra-Cell®

INDUSTRIAL PUMPS

Models: D66, G66

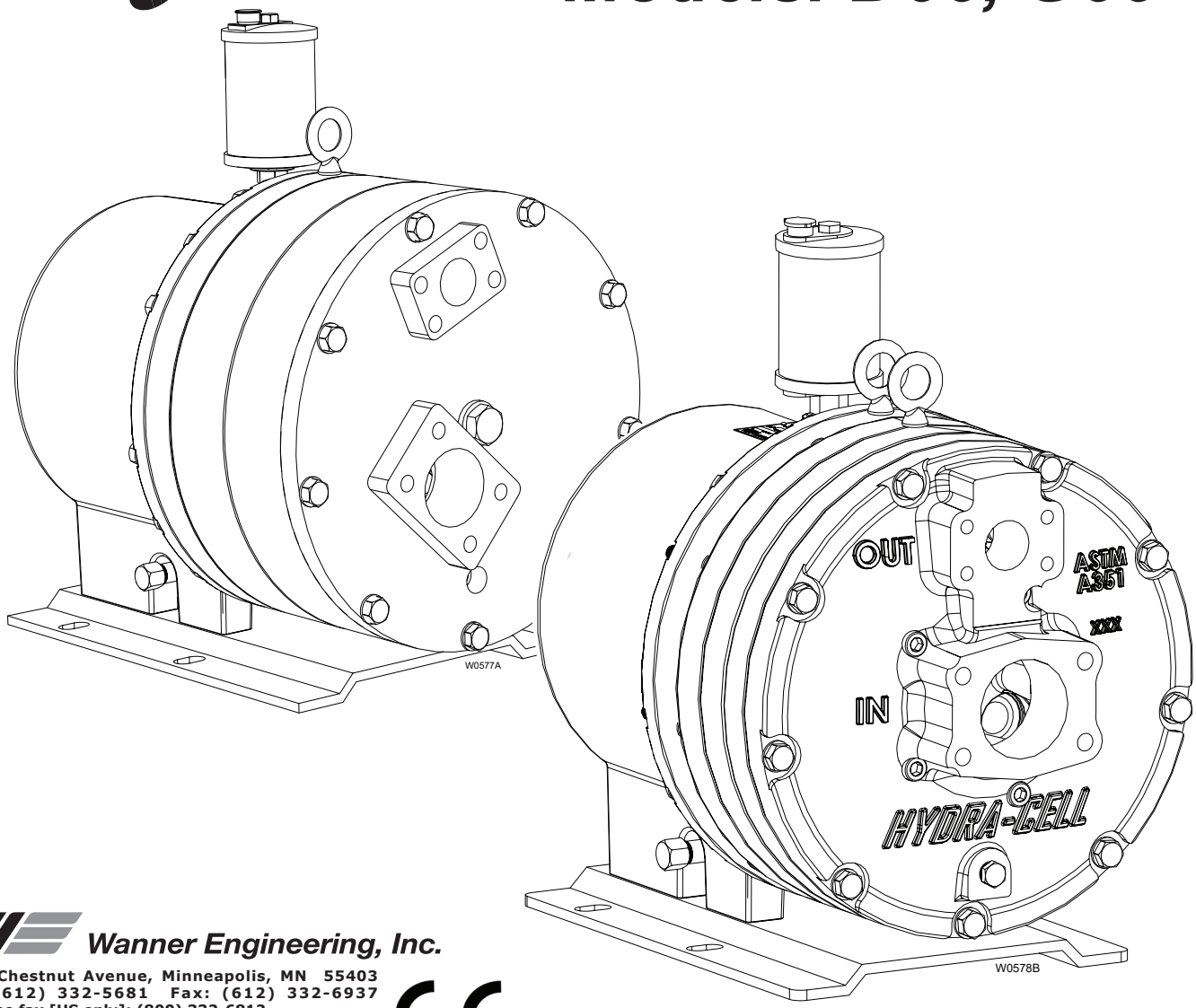

Wanner Engineering, Inc.

1204 Chestnut Avenue, Minneapolis, MN 55403
Tel: (612) 332-5681 Fax: (612) 332-6937
Toll-free fax [US only]: (800) 332-6812
www.hydra-cell.com/metering
email: sales@wannereng.com

CE

D/G-66 Contents

D/G-66 Specifications

Maximum Flow Rate	65.7 gpm (248.7 l/min)
Maximum Pressure	Metallic: 700 psi (48 bar) Non-Metallic: 250 psi (17 bar)

Flow Capacities @ 200 psi (14 bar)

Model	rpm	gpm	l/min
Metal	1000	67.8	256

Flow Capacities @ 250 psi (17 bar)

Model	rpm	gpm	l/min
Plastic	1000	67.5	255

Flow Capacities @ 700 psi (48 bar)

Model	rpm	gpm	l/min
Metal	1000	65.7	248

Delivery @ 200 psi (14 bar)

Model	gal/rev	liters/rev
Metal	0.0678	0.256

Delivery @ 250 psi (17 bar)

Model	gal/rev	liters/rev
Plastic	0.0675	0.255

Delivery @ 700 psi (48 bar)

Model	gal/rev	liters/rev
Metal	0.0657	0.248

Maximum Discharge Pressure

Metallic Heads:	700 psi (48 bar) @ 1000 rpm
Non-Metallic Heads:	250 psi (17 bar) Polypropylene

Maximum Inlet Pressure

Metallic:	250 psi (17 bar)
Non-Metallic:	50 psi (3.5 bar)

Maximum Operating Temperature

Metallic Heads:	250°F (121°C) – consult factory for correct component selection for temperatures from 160°F (71°C) to 250°F (121°C)
Non-Metallic Heads:	Polypropylene: 120°F (49°C); consult factory for temperatures above 120°F (49°C)

Maximum Solids Size	800 microns
Inlet Port	3 inch NPT
Non-Metallic Heads:	2-1/2 inch SAE J518 Flange
Metallic Heads:	3 inch SAE J518 Flange
Discharge Port	1-1/2 inch NPT 1-1/2 inch SAE
Shaft Diameter	2 inches (50.8 mm)
Shaft Rotation	Reverse (bi-directional)
Bearings	Tapered roller bearings
Oil Capacity	8 US quarts (7.5 liters)
Weight	Metallic Heads: 500 lbs (226 kg) Non-metallic Heads: 295 lbs (133 kg)

Calculating Required Power

$$\frac{100 \times \text{rpm}}{63{,}000} + \frac{\text{gpm} \times \text{psi}}{1{,}460} = \text{electric motor hp}$$

$$\frac{100 \times \text{rpm}}{84{,}428} + \frac{\text{l/min} \times \text{bar}}{511} = \text{electric motor kW}$$

When using a variable frequency drive (VFD) calculate the hp or kW at minimum and maximum pump speed to ensure the correct hp or kW motor is selected. Note that motor manufacturers typically de-rate the service factor to 1.0 when operating with a VFD.

D/G-66 Specifications

Performance

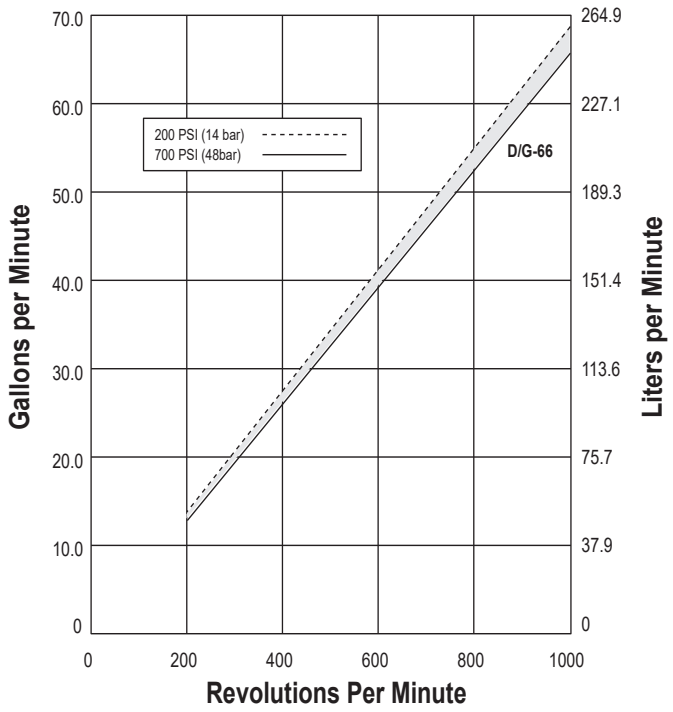

Net Positive Suction Head – NPSHr

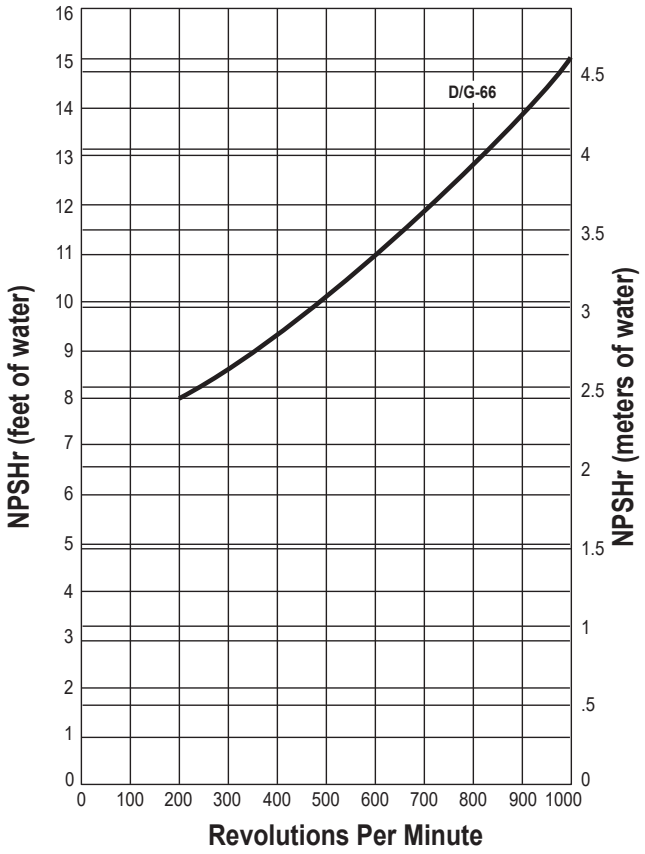

D/G-66 Dimensions

Models with Metallic Pump Head Inches (mm) (NPT, BSPT, and SAE)

Brass

Cast Iron

316 Stainless Steel

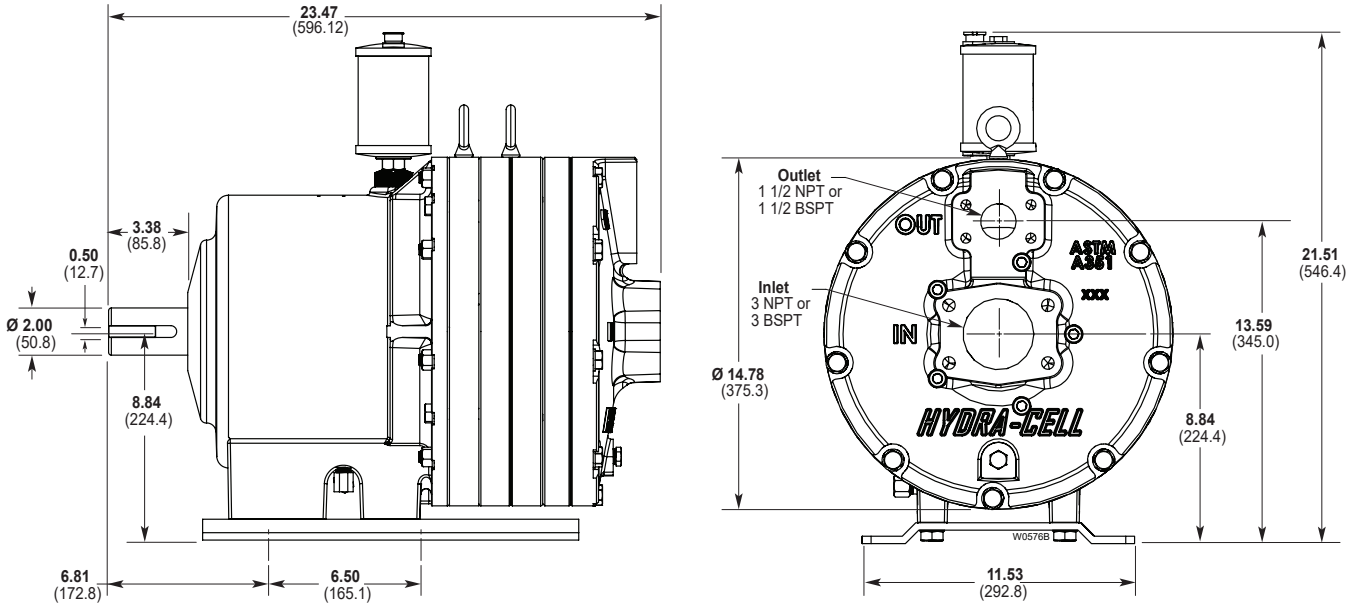

Models with Non-Metallic Pump Head Inches (mm) (SAE)

Polypropylene

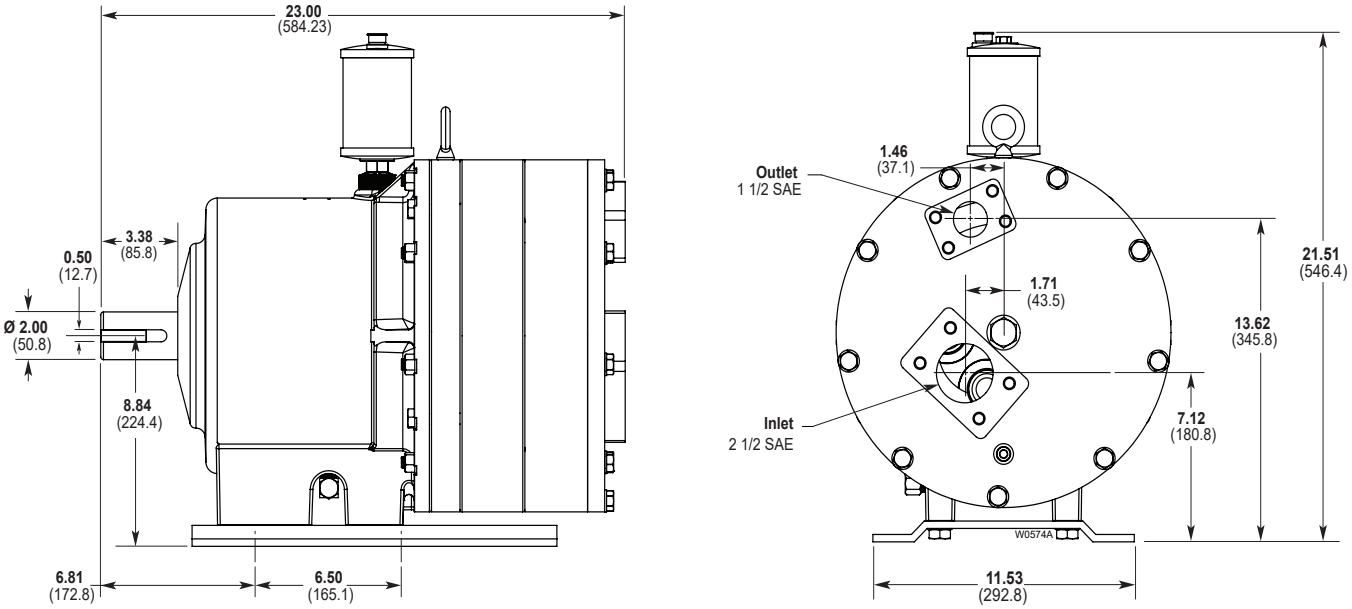

D/G-66 Installation

Safety Precautions

General remarks

These safety / installation instructions contain fundamental information and precautionary notes and must be kept available to all associated with the operation of the pump. Please read them thoroughly prior to installation, electrical connection and commissioning of the unit. It is imperative that all other operating instructions relating to the components of individual units are followed.

These safety / installation instructions do not take local regulations into account. The operator must ensure that such regulations are observed by all, including the personnel carrying out the installation.

Each pump must be labeled by the end user to warn of any hazards that the system process may produce; e.g. corrosive chemicals or hot process etc.

All personnel involved in the operation, maintenance, inspection and installation of the pump must be fully qualified to carry out the work. The personnel's responsibilities, competence and supervision must be clearly defined by the operator. To the extent that if the personnel in question is not already in possession of the requisite know how, appropriate training and instruction must be provided. In addition, the operator is responsible for ensuring that the contents of the operating instructions are fully understood by all the responsible personnel.

When installing a Hydra-Cell pump in conjunction with a motor or motor and frequency controller the relevant manuals must be referred to for electromagnetic compatibility. The installation should conform to EN 61800 and EN 60204 as applicable.

All safety instructions in this manual and all relevant local health and safety regulations must be followed.

Attention must be paid to the weight of the pump before attempting to lift either manually or selecting appropriate lifting equipment.

D/G-66 Installation

Equipment Precautions

Adequate Fluid Supply. To avoid cavitation and premature pump failure, be sure that the pump will have an adequate fluid supply and that the inlet line will not be obstructed. See “Inlet Piping”.

Positive Displacement. This is a positive-displacement pump. To avoid severe system damage if the discharge line ever becomes blocked, install a relief valve downstream from the pump. See “Discharge Piping”. A suitable and calibrated pressure gauge should be installed in the discharge line close to the pump head.

Safety Guards. Install adequate safety guards over all pulleys, belts, and couplings. Follow all codes and regulations regarding installation and operation of the pumping system.

Shut-Off Valves. Never install shut-off valves between the pump and discharge pressure regulator, or in the regulator bypass line.

Freezing Conditions. Protect the pump from freezing. See also the Maintenance Section.

Working Pump. The pump body will become hot during operation even if the liquid being pumped is cold.

Consult the Factory for the following situations:

- Extreme temperature applications – above 160° F (71°C) or below 40° F (4.4°C)
- Pressure feeding of pumps
- Viscous or abrasive fluid applications
- Chemical compatibility problems
- Hot ambient temperatures – above 110° F (43°C)
- Conditions where pump oil may exceed 200° F (93°C) because of a combination of hot ambient temperatures, hot fluid temperature, and full horsepower load — an oil cooler may be required

Location

Locate the pump as close to the supply source as possible. Install it in a lighted clean space where it will be easy to inspect and maintain. Allow room for checking the oil level, changing the oil, and removing the pump head (manifold, valve plate and related items).

Mounting

The pump shaft can rotate in either direction. To prevent vibration, mount the pump and motor securely on a level rigid base.

On a belt-drive system, align the sheaves accurately; poor alignment wastes horsepower and shortens the belt and bearing life. Make sure the belts are properly tightened, as specified by the belt manufacturer.

On a direct-drive system, align the shafts accurately. Unless otherwise specified by the coupling manufacturer, maximum parallel misalignment should not exceed 0.015 in. (0.4 mm) and angular misalignment should be held to 1° maximum. Careful alignment extends life of the coupling, pump, shafts, and support bearings. Consult coupling manufacturer for exact alignment tolerances.

Drive couplings, belts and pulleys must be of suitable design, correctly sized, fitted, and rated for the maximum load required.

On a close-coupled system, coat the motor shaft liberally with anti-seize.

The pump, motor and related components must be adequately grounded.

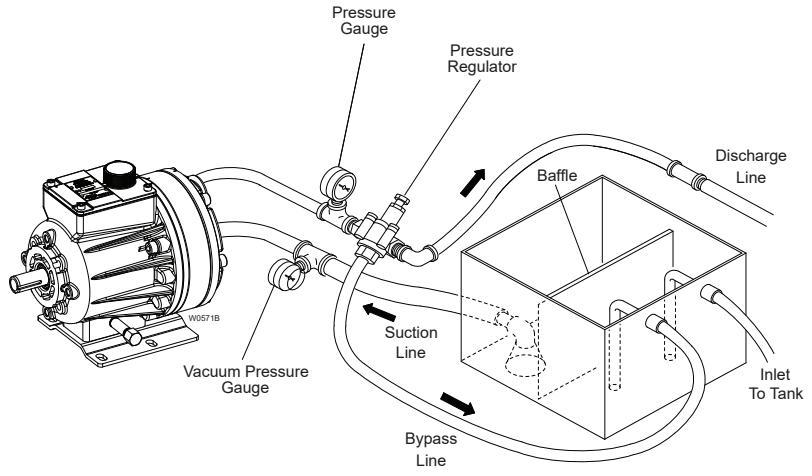

D/G-66 Installation

Inlet Piping (Suction Feed)

CAUTION: When pumping at temperatures above 160° F (71°C), attention must be paid to the vapor pressure curve of the liquid. A pressure-feed system may be required.

Do not supply more than one pump from the same inlet line.

Install drain cocks at any low points of the suction line, to permit draining in freezing conditions.

Provide for permanent or temporary installation of a vacuum gauge to monitor the inlet suction. To maintain maximum flow, insure the system NPSHa exceeds the NPSHr of the pump.

Supply Tank

Use a supply tank that is large enough to provide time for any trapped air in the fluid to escape. The tank size should be at least twice the maximum pump flow rate.

Isolate the pump and motor stand from the supply tank, and support them separately.

Install a separate inlet line from the supply tank to each pump.

Install the inlet and bypass lines so they empty into the supply tank below the lowest water level, on the opposite side of the baffle from the pump suction line.

Do not use a line strainer or filter in the suction line unless regular maintenance is assured. If a line strainer is used in the system, install it in the inlet line to the supply tank. It should have a free-flow area of at least three times the free-flow area of the inlet.

To reduce aeration and turbulence, install a completely submerged baffle plate to separate the incoming and outgoing liquids.

Install a vortex breaker in the supply tank, over the outlet port to the pump.

Place a cover over the supply tank, to prevent foreign objects from falling into it.

Hose and Routing

Size the suction line at least one size larger than the pump inlet, and so that the velocity will not exceed 1-3 ft/sec (0.3 to 0.9 m/s):

For pipe in mm: Velocity (m/sec) = 21.2 x LPM/Pipe ID^2

For pipe in inches: Velocity (ft/sec) = 0.408 x GPM/Pipe ID^2

Keep the suction line as short and direct as possible. A maximum of 1m (3 feet) is recommended.

Use flexible hose and/or expansion joints to absorb vibration, expansion, or contraction.

If possible, keep the suction line level. Do not have any high points to collect vapor unless these high points are vented.

To reduce turbulence and resistance, do not use 90° elbows. If turns are necessary in the suction line, use 45° elbows or arrange sweeping curves in the flexible inlet hose.

If a block valve is used, be sure it is fully opened so that the flow to the pump is not restricted. The opening should be at least the same diameter as the inlet plumbing ID.

Install piping supports where necessary to relieve strain on the inlet line and to minimize vibration.

D/G-66 Installation

Inlet Piping (Pressure Feed)

Provide for permanent or temporary installation of a vacuum/ pressure gauge to monitor the inlet vacuum or pressure. Pressure at the pump inlet should not exceed 17 bar (250 psi); if it could get higher, install an inlet pressure reducing regulator. Do not supply more than one pump from the same inlet line.

Inlet Calculations

Acceleration Head

Calculating the Acceleration Head

Use the following formula to calculate acceleration head losses. Subtract this figure from the NPSHa, and compare the result to the NPSHr of the Hydra-Cell pump.

Ha = (L x V x N x C) ÷ (K x G)

where:

Ha = Acceleration head (ft of liquid)

L= Actual length of suction line (ft) — not equivalent length

V= Velocity of liquid in suction line (ft/sec)

$$\text{or } V = GPM \left(\frac{0.408}{\text{Pipe ID}^2} \right)$$

N= RPM of crank shaft

C= Constant determined by type of pump — Use 0.066 for D/G03, M03, M23, G13, D/G10, D/G04 and H/G25 pumps. Use 0.04 for D/G15, D/G35, and D/G-66 pumps. Use 0.628 for F/G20/21/22 pumps.

K= Constant to compensate for compressibility of the fluid — use: 1.4 for de-aerated or hot water; 1.5 for most liquids; 2.5 for hydrocarbons with high compressibility

G= Gravitational constant (32.2 ft/sec^2)

Friction Losses

Calculating Friction Losses in Suction Piping

When following the above recommendations (under “inlet Piping”) for minimum hose/pipe I.D. and maximum length, frictional losses in the suction piping are negligible (i.e., Hf = 0) if you are pumping a water-like fluid.

When pumping more-viscous fluids such as lubricating oils, sealants, adhesives, syrups, varnishes, etc., frictional losses in the suction piping may become significant. As Hf increases, the available NPSH (NPSHa) will decrease, and cavitation will occur.

In general, frictional losses increase with increasing viscosity, increasing suction-line length, increasing pump flow rate, and decreasing suction-line diameter. Changes in suction-line diameter have the greatest impact on frictional losses: a 25% increase in suction-line diameter cuts losses by more than two times, and a 50% increase cuts losses by a factor of five times.

Consult the factory before pumping viscous fluids.

Minimizing Acceleration Head and Frictional Losses

To minimize the acceleration head and frictional losses:

- Keep inlet lines less than 1 m (3 ft) long.
- Use inlet hose at least one size larger than the size of the inlet port of the pump.
- Use flexible, non-collapsible suction hose and/or expansion joints to absorb vibrations, expansions and contractions.
- Minimize fittings (elbows, valves, tees, etc.)
- **Use a suction stabilizer on the inlet.**

Net Positive Suction Head

NPSHa must be equal to or greater than NPSHr. If not, the pressure in the pump inlet will be lower than the vapor pressure of the fluid— and cavitation will occur.

Calculating the NPSHa

Use the following formula to calculate the NPSHa:

NPSHa = Pt + Hz - Hf - Ha - Pvp

where:

Pt = Atmospheric pressure

Hz = Vertical distance from surface liquid to pump center line (if liquid is below pump center line, the Hz is negative)

Hf = Friction losses in suction piping

Ha = Acceleration head at pump suction

Pvp = Absolute vapor pressure of liquid at pumping temperature

Notes:

- In good practice, NPSHa should be 2 ft (0.6 m) greater than NPSHr.
- All values must be expressed in feet of liquid.

Atmospheric Pressure at Various Altitudes

Altitude (ft)	Pressure (ft of H_2O)	Altitude (ft)	Pressure (ft of H_2O)
0	33.9	1500	32.1
500	33.3	2000	31.5
1000	32.8	5000	28.2

Discharge Piping

Note: Consult the Factory before manifolding two or more pumps together.

Hose and Routing

Use shortest, most-direct route for discharge line.

Select pipe or hose with **working pressure** rating of at least 1.5 times maximum system pressure. EXAMPLE: Select a 1500-psi W. P.-rated hose for systems to be operated at 1000-psi-gauge pressure.

Use about 6 ft (1.8 m) of flexible hose between pump and rigid piping to absorb vibration, expansion or contraction.

Support pump and piping independently. Size discharge line so that velocity of fluid will not exceed 2-3 m/sec (8-10 ft/sec):

For pipe in mm: Velocity (m/sec) = 21.2 x LPM/Pipe ID^2

For pipe in inches: Velocity (ft/sec)

$$\text{or } V = 0.408 \left(\frac{\text{GPM}}{\text{Pipe ID}^2} \right)$$

Note: Pumps with non-metallic pumping head are limited to 17 bar (250 psi) maximum working pressure rating.

Pressure Regulation

Install pressure regulator or unloader in discharge line. Bypass pressure must not exceed pressure limit of pump.

Size regulator so that, when fully open, it will be large enough to relieve full capacity of pump without over pressurizing the system.

Locate regulator as close to pump as possible and ahead of any other valves.

Adjust pressure regulator valve to no more than 10% over maximum working pressure of system. Do not exceed manufacturer's pressure rating for pump or regulator.

Route the bypass line to the supply tank, not to the suction line (to reduce the chance of turbulence and cavitation within the pump).

If the pump may be run for a long time with the discharge closed and fluid bypassing, install a thermal protector in the bypass line (to prevent severe temperature buildup in the bypassed fluid).

The safety, pressure regulating valve must be checked for correct operation on a regular basis.

CAUTION: *Never* install shutoff valves in the bypass line or between the pump and pressure regulator or relief valve.

Provide for permanent or temporary installation of pressure gauge to monitor discharge pressure at pump.

For additional system protection install safety relief valve in discharge line downstream from pressure regulator.

D/G-66 Installation

Before Initial Start-Up

Before you start the pump, be sure that:

- All shut-off valves are open, and pump has adequate supply of fluid.
- All connections are tight.
- The oil is at the correct level for the model of pump;

  D/G10 - ¼ in. (6 mm) from the bottom of the fill port.

  D/G04, G/H25, D/G15, D/G35, D/G-66 - ¼ in. (6mm) above the cast surface in the upper oil reservoir.

  F/G20/21/22 - The oil reservoir beneath the reservoir diaphragm is completely full. Note: The reservoir is filled and sealed at the factory. If you are unsure about the oil level, remove the cover and slowly lift the diaphragm. Refer to Service Procedure #6, “Fill and Seal the Oil Reservoir”, in the Fluid-End Service Section.

  D/G03 - The oil level should be 3/4 in. (20 mm) from the top of the fill port.
- The relief valve on the pump outlet is adjusted so the pump starts under minimum pressure.
- All pulleys and belts are properly aligned, and belts are tensioned according to specification.
- All pulleys and belts have adequate safety guards.
- Ensure that the materials of construction of the pump are compatible with the liquid being pumped.

Initial Start-Up Procedure

1. Turn on power to pump motor.
2. Check inlet pressure or vacuum. To maintain maximum flow, inlet vacuum must not exceed 180 mm Hg at 21°C (7 in. Hg at 70° F). Inlet pressure must not exceed 17 bar (250 psi).
3. Listen for any erratic noise and look for unsteady flow.
4. If system has airlock and pump fails to prime:

   a. Turn off power.

   b. Remove pressure gauge or plug from tee fitting at pump outlet (refer to illustration drawing at the front of this section).

   Note: Fluid may come out of this port when the plug is removed. Provide an adequate catch basin for fluid spillage, if required. Fluid will come out of this port when the pump is started, so we recommend that you attach adequate plumbing from this port so fluid will not be sprayed or lost. Use high-pressure-rated hose and fittings from this port. Take all safety precautions to assure safe handling of the fluid being pumped.

   c. Jog system on and off until fluid coming from this port is air-free.

   d. Turn off power.

   e. Remove plumbing that was temporarily installed, and reinstall pressure gauge or plug.
5. Adjust discharge pressure regulator to desired operating and bypass pressures. Do not exceed maximum pressure rating of pump.
6. After pressure regulator is adjusted, set safety relief valve at 7 bar (100 psi) higher than desired operating pressure. To verify this setting, adjust discharge pressure regulator upward until relief valve opens. Follow recommendations in **Step 4b Note** for handling fluid that will come from relief valve.
7. Reset discharge pressure regulator to desired system pressure.
8. Provide return line from relief valve to supply tank, similar to bypass line from pressure regulator.

D/G-66 Maintenance

Note: The numbers in parentheses are the Reference Numbers on the exploded view illustrations found in this manual and in the Parts Section.

Daily

Check oil level and condition of oil. The oil is at the correct level for the model of pump;

D/G10 - ¼ in. (6 mm) from the bottom of the fill port.

D/G04, G/H25, D/G15, D/G35, D/G-66 - ¼ in. (6mm) above the cast surface in the upper oil reservoir.

F/G20/21/22 - The oil reservoir beneath the reservoir diaphragm is completely full. Note: The reservoir is filled and sealed at the factory. If you are unsure about the oil level, remove the cover and slowly lift the diaphragm. Refer to Service Procedure #6, "Fill and Seal the Oil Reservoir", in the Fluid-End Service Section.

D/G03 - The oil level should be 3/4 in. (20 mm) from the top of the fill port.

Use the appropriate Hydra-Oil for the application (contact Wanner Engineering if in doubt).

CAUTION: If you are losing oil but don't see any external leakage, or if the oil becomes discolored and contaminated, one of the diaphragms (20) may be damaged. Refer to the Fluid-End Service Section. Do not operate the pump with a damaged diaphragm.

CAUTION: Do not leave contaminated oil in the pump housing or leave the housing empty. Remove contaminated oil as soon as discovered, and replace it with clean oil.

Periodically

Change the oil after the first 100 hours of operation, and then according to the guidelines below.

Hours Between Oil Changes @ Various Process Fluid Temperatures

Pressure	RPM	<90°F (32°C)	<139°F (60°C)	<180°F (82°C)
Metallic Pump Head				
<650 psi (45 bar)	<1200	6,000	4,500	3,000
	<1800	4,000	3,000	2,000
<1000 psi (69 bar)	<1200	4,000	3,000	2,000
	<1800	2,000	1,500	1,000
Non-Metallic Pump Head				
<250 psi (17 bar)	<1200	4,000	3,000	—
	<1800	2,000	1,500	—

Note: Minimum oil viscosity for proper hydraulic end lubrication is 16-20 cST (80-100 SSU).

Note: Use of an oil cooler is recommended when process fluid and/or hydraulic end oil exceeds 180°F (82°C) for Metallic Pump Head models or when hydraulic end oil exceeds 180°F (82°C) for Non-Metallic Pump Head models.

When changing, remove the drain plug cap (34) at the bottom of the pump so all oil and accumulated sediment will drain out.

CAUTION: Do not turn the drive shaft while the oil reservoir is empty.

Check the inlet pressure or vacuum periodically with a gauge. If vacuum at the pump inlet exceeds 7 in. Hg (180 mm Hg), check the inlet piping system for blockages. If the pump inlet is located above the supply tank, check the fluid supply level and replenish if too low.

CAUTION: Protect the pump from freezing. Refer also to the "Shutdown Procedure".

Shutdown Procedure During Freezing Temperatures

Take all safety precautions to assure safe handling of the fluid being pumped. Provide adequate catch basins for fluid drainage and use appropriate plumbing from drain ports, etc., when flushing the pump and system with a compatible antifreeze.

1. Adjust discharge pressure regulating valve so pump runs under minimum pressure. Stop pump.
2. Drain supply tank; open any draincocks in system piping and collect drainage; remove plug (3) from manifold and collect drainage.
3. Close draincocks in system piping and replace manifold plug.
4. Fill supply tank with enough antifreeze to fill system piping and pump.

   Note: Disconnect the system return line from the supply tank and connect it to a separate reservoir.
5. Start pump and allow it to run until system is filled with antifreeze.

   Note: If the system has an air lock and the pump fails to prime, follow step 4 of the Initial Start-up Procedure to clear the air.
6. When mostly antifreeze is flowing from system return line, stop pump. Connect system return line back to supply tank and circulate antifreeze for short period.
7. It is also good practice to change oil in hydraulic end before storage for an extended period. This will remove any accumulated condensation and sediment from oil reservoir. Drain and refill hydraulic end with appropriate Hydra-Oil and operate pump for short period to assure smooth performance.

D/G-66 Fluid End Parts - Metal

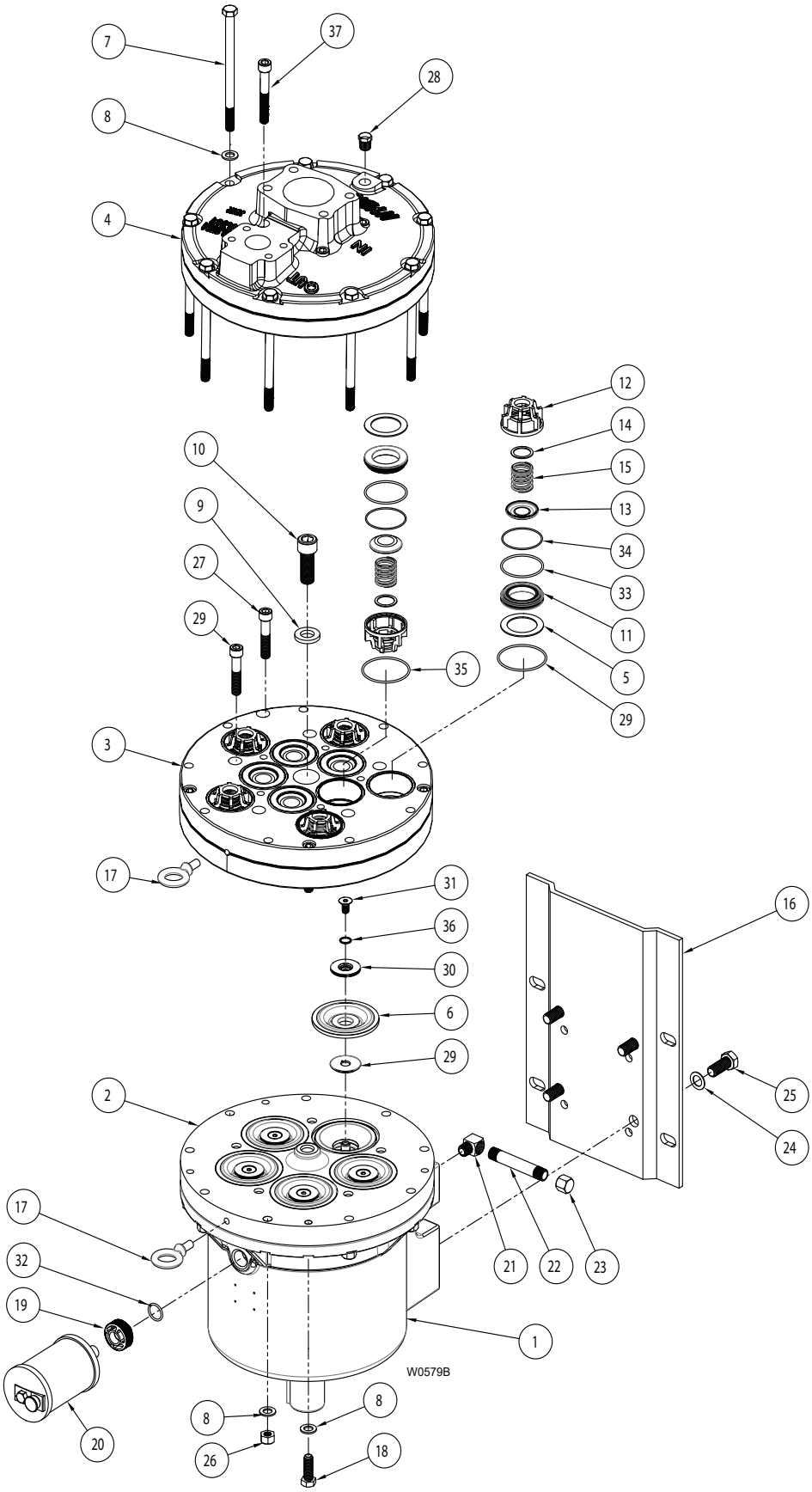

D/G-66 Fluid End Parts - Metal

Ref. No.	Part Number	Description	Quantity/ Pump
1	D40-001-1010	Machined Housing	1
2	210-153	Cylinder Housing	Ref
3	210-305-0102	Valve Plate, Iron, Fully Machined	1
	210-305-0201	Valve Plate, SS 316, Machined	
	210-305-0501	Valve Plate, Brass, Machined	
4	210-307-0101	Manifold, Machined, Ductile Iron, SAE	1
	210-307-0102	Manifold, Machined, Ductile Iron, NPT	
	210-307-0103	Manifold, Machined, Ductile Iron, BSPT	
	210-307-0201	Manifold, Machined, SS 316, SAE	
	210-307-0202	Manifold, Machined, SS 316, NPT	
	210-307-0203	Manifold, Machined, SS 316, BSPT	
	210-307-0401	Manifold, Machined, Mang Bronz, SAE	
	210-307-0402	Manifold, Machined, Mang Bronz, NPT	
	210-307-0403	Manifold, Machined, Mang Bronz, BSPT	
5	D40-125-2310	Washer, Dampening, Celcon	10
	D40-125-2317	Washer, Dampening, Polypropylene	
	D40-125-2318	Washer, Dampening, PVDF	
6	210-118-01	Diaphragm, Buna-N, 4”	5
	210-118-02	Diaphragm, FKM, 4”	
7	210-310	Screw, HHCS 1/2-13 X 7.5, HHCS	9
8	D40-048-2010	Hardened Washer, 1/2”	21
9	210-309	Washer, 3/4”	1
10	210-306	Screw, 3/4-16 X 2, SHCS	1
11	210-129-01	Valve Seat, 17-4 PH	10
	210-129-02	Valve Seat, Nitronic 50	
	210-129-03	Valve Seat, Hastelloy C276	
12	210-157-01	Valve Spring Retainer, Celcon	10
	210-157-03	Valve Spring Retainer, Polypropylene	
	210-157-05	Valve Spring Retainer, PVDF	
13	210-120-01	Disc, Valve , 17-4 PH	10
	210-120-02	Disc, Valve , Nitronic 50	
	210-120-03	Disc, Valve , Hastelloy C276	
14	D40-123-1010	Washer, Valve Spring, SS 316	10
	D40-123-1017	Washer, Valve Spring, Hastelloy	
15	D40-022-3110	Spring, Ø1.247 X 1.275, 17-7 PH	10
	D40-022-3118	Spring, Ø1.247 X 1.275, Elgiloy	
16	D40-025-1010	Baseplate	1
17	D40-102-2000	Eyebolt, 7/16-14 UNC-2A, Wanner Blue	2
18	D40-029-2010	Screw, 1/2-13 UNC-2A X 1.5 HHCS	4
19	D10-039-1217	Cap, Oil Fill, Red, Tapped	1
20	A01-117-3400	Oil Bottle, 12 fl. oz, 3/8 NPT	1
21	D25-076-2210	Street Elbow, 3/8 NPT Brass	1
22	D25-077-2210	Pipe, Nipple, 3/8 NPT X 4	1
23	D25-078-2210	Pipe, Cap, 3/8 NPT	1
24	D40-054-2010	Lockwasher, 5/8	4
25	D40-087-2010	Screw, 5/8-11 UNC-2A X 1.50, HHCS	4
26	D40-028-2010	Nut, Hex 1/2-13 UNC 2B X 7/16	8
27	D40-101-2010	Screw, 1/2-13 UNC-3A X 2.5, SHCS	9
28	D25-038-2210	Fitting, Plug Pipe, 3/8 NPT, Brass	1
	D25-038-2211	Fitting, Plug Pipe, 3/8 NPT, 316 SST	1
29	210-009	Plunger, D/G-66	5
30	210-008-01	Follower, SS 316	5
	210-008-02	Follower, Hastelloy C276	
31	D40-030-2010	Screw, 7/32 Socket, SS316, 3/8-16 UNC 2A X .75	5
32	D10-080-2110	O-Ring, 70 Durometer, -118 Buna-N	1
	D10-080-2111	O-Ring, 70 Durometer, -118 FKM	
33	D40-035-2110	O-Ring, -141 UDN, 90 Duro, Buna-N	10
	D40-035-2111	O-Ring, -141 UDN, 90 Duro, FKM	
34	D40-092-2110	O-Ring, -035 UDN, 70 Duro, Buna-N	10
	D40-092-2111	O-Ring, -035 UDN, 70 Duro, FKM	
35	210-314-01	O-Ring, -146, UDN, Buna-N	10
	210-314-02	O-Ring, -146, UDN, FKM	
36	D40-047-2110	O-Ring, D40, -015, Buna-N	5
	D40-047-2111	O-Ring, D40, -015, FKM	
37	210-311	Screw, 1/2-13 X 3.5, SHCS	5

D/G-66 Fluid End Parts - Non-Metal

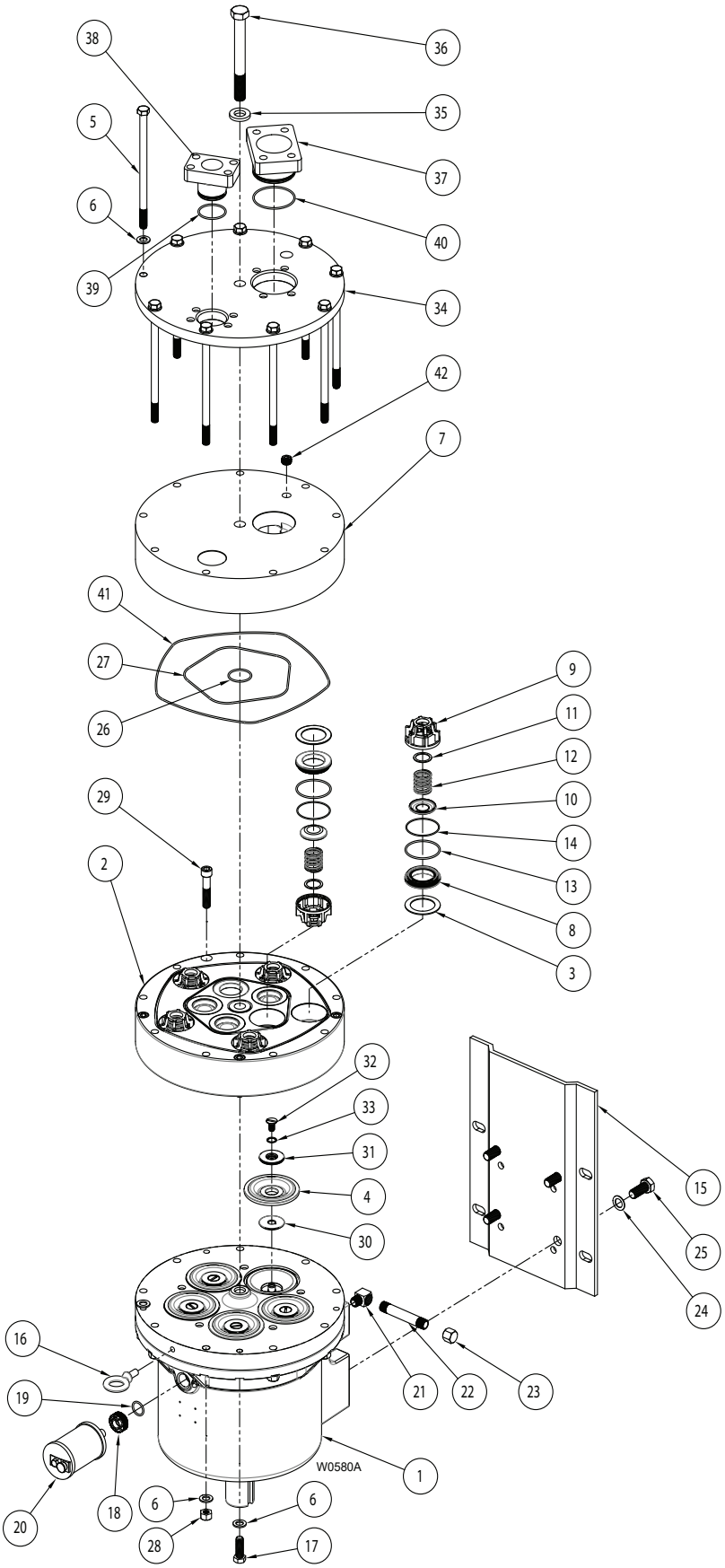

D/G-66 Fluid End Parts - Non-Metal

Ref. No.	Part Number	Description	Quantity/ Pump
1	D40-001-1010	Machined Housing	1
2	210-101-0101	Valve Plate, Machined, Plastic	1
3	D40-125-2310	Washer, Dampening, Celcon	10
	D40-125-2317	Washer, Dampening, Polypropylene	
	D40-125-2318	Washer, Dampening, PVDF	
4	210-118-01	Diaphragm, Buna-N, 4”	5
	210-118-02	Diaphragm, FKM, 4”	
5	210-109	Screw, 1/2-13 X 9 HHCS	9
6	D40-048-2010	Hardened Washer, 1/2”	21
7	210-103-0101	Manifold, Machined, Plastic	1
8	210-129-01	Valve Seat, 17-4 PH	10
	210-129-02	Valve Seat, Nitronic 50	
	210-129-03	Valve Seat, Hastilloy C276	
9	210-157-01	Valve Spring Retainer, Celcon	10
	210-157-03	Valve Spring Retainer, Polypropylene	
	210-157-05	Valve Spring Retainer, PVDF	
10	210-120-01	Valve Disc, 17-4 PH	10
	210-120-02	Valve Disc, Nitronic-50	10
	210-130-03	Valve Disc, Hastelloy C276	10
11	D40-123-1010	Washer, Valve Spring, SS316	10
	D40-123-1017	Washer, Valve Spring	10
12	D40-022-3110	Spring, Ø1.247 X 1.275, 17-7 PH	10
	D40-022-3118	Spring, Ø1.247 X 1.275, Elgiloy	10
13	D40-035-2110	O-Ring,-141 UDN, 90 Duro, Buna-N	10
	D40-035-2111	O-Ring,-141 UDN, 90 Duro, FKM	10
14	D40-092-2110	O-Ring, -035 UDN, 70 Duro, Buna-N	10
	D40-092-2111	O-Ring, -035 UDN, 70 Duro, FKM	10
15	D40-025-1010	Baseplate	1
16	D40-102-2000	Eyebolt, 7/16-14 UNC-2A, Wanner Blue	1
17	D40-029-2010	Screw, 1/2-13 UNC-2A X 1.5 HHCS	4
18	D10-039-1217	Cap, Oil Fill, Red, Tapped	1
19	D10-080-21XX	O-Ring, 70 Durometer, -118 UDN	1
20	A01-117-3400	Oil Bottle, 12 fl. oz, 3/8 NPT	1
21	D25-076-2210	Street Elbow, 3/8 NPT Brass	1
22	D25-077-2210	Pipe, Nipple, 3/8 NPT X 4	1
23	D25-078-2210	Pipe, Cap, 3/8 NPT	1
24	D40-054-2010	Lockwasher, 5/8	4
25	D40-087-2010	Screw, 5/8-11 UNC-2A X 1.50, HHCS	4
26	210-116-01	O-Ring, -128, Buna-N	1
	210-116-02	O-Ring, -128, FKM	1
27	210-111-01	O-Ring, -169, Buna-N	1
	210-111-02	O-Ring, -169, FKM	1
28	D40-028-2010	Nut, Hex 1/2-13 UNC 2B X 7/16	8
29	D40-101-2010	Screw, 1/2-13 UNC-3A X 2.5, SHCS	4
30	210-009	Plunger, D/G-66	5
31	210-008-01	Follower, SS316	5
	210-008-02	Follower, Hastelloy C276	5
32	D40-030-2010	Screw, 3/8-16, FHMS, SS316	5
	D40-030-2017	Screw, 3/8-16, FHMS, Hastelloy	5
33	D40-047-2110	O-Ring, D40, -015, Buna-N	5
	D40-047-2111	O-Ring, D40, -015, FKM	5
34	210-105	Support Plate	1
35	210-309	Washer, 3/4”	1
36	210-110	Screw, 3/4-16 X 6.5, HHCS	1
37	210-106-02	Adapter, SAE Inlet	1
38	210-107-02	Adapter, SAE Outlet	1
39	210-114-01	O-Ring, -133, Buna-N	1
	210-114-02	O-Ring, -133, FKM	1
40	210-113-01	O-Ring, -149, Buna-N	1
	210-113-02	O-Ring, -149, FKM	1
41	210-112-01	O-Ring, -278, Buna-N	1
	210-112-02	O-Ring, -278, FKM	1
42	210-115	Pipe Plug, 3/8-18, Polypropylene	1

D/G-66 Hydraulic End Parts

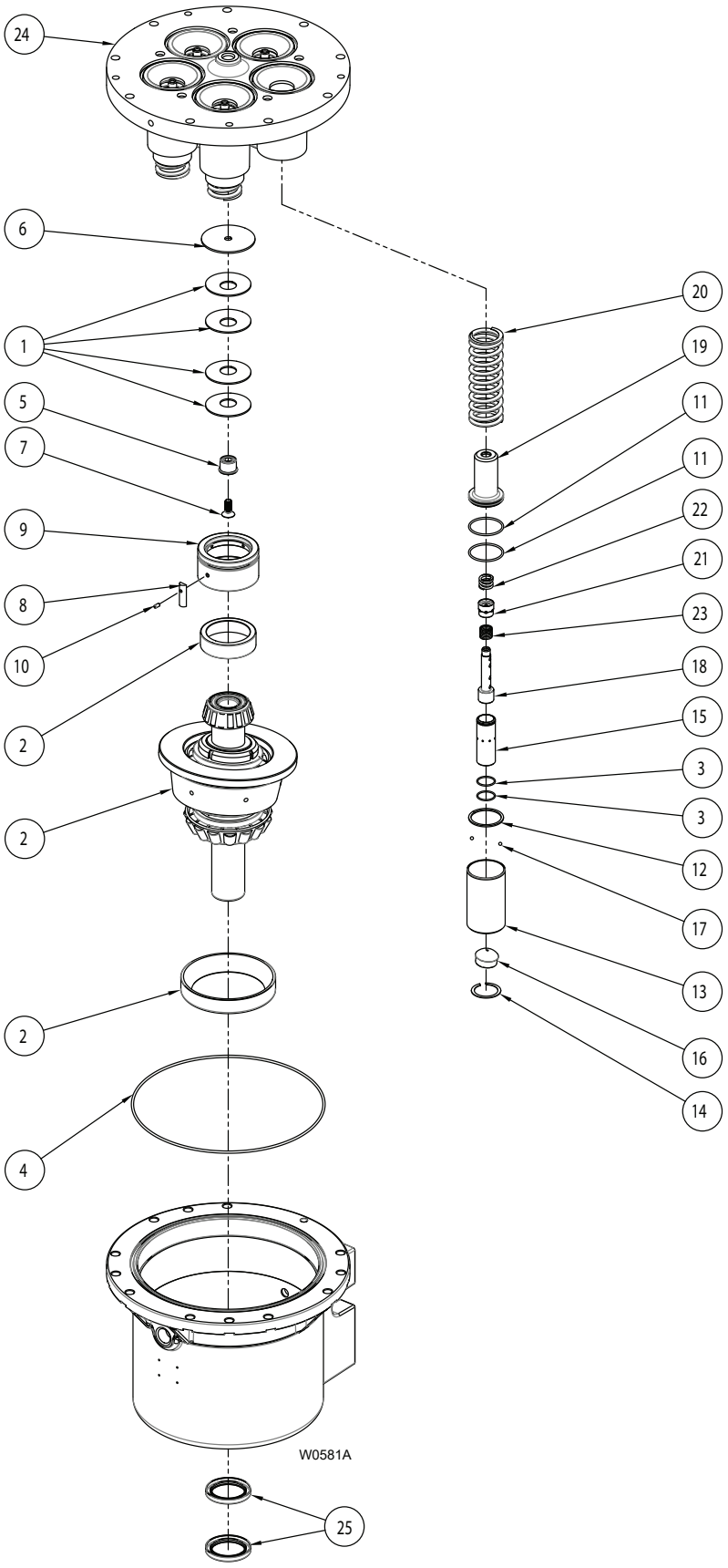

D/G-66 Hydraulic End Parts

Ref. No.	Part Number	Description	Quantity/ Pump
1	D40-075-3110	Spring Disc Adjusting Plate	4
2	210-906	Cam Assembly	1
3	D10-034-2110	O-Ring, .989 Id X .070 W, Buna-N	10
4	D40-037-2110	O-Ring,-277, 90 Duro, Buna-N	1
5	D35-112-1011	Guide, D35 Disc Spring	1
6	D35-116-1010	D35 Backup Washer	1
7	G35-115-2011	Screw, M10 X 1.5 X 25, SFHC	1
8	D35-113-1010	Key, D35 Round Radius	1
9	D35-012-1011	Bearing Carrier	1
10	D35-110-2011	Pin Dowel, Ø3/16 X 3/8	1
11	D40-034-2110	O-Ring, -135 UDN, 70 Duro, Buna-N	10
12	D40-041-1010	Ball Retainer, D40	5
13	210-154	Piston, D/G-66	5
14	D40-050-1010	Foot Retainer, D40	5
15	210-155	Valve Cylinder, D/G-66	5
16	D40-013-1010	Foot, D40	5
17	D10-015-3010	Ball, .1875 Dia Grade 24 Alloy Steel	10
18	D40-044-1010	Valve Plunger, D40	5
19	210-156	Retainer, Return Spring	5
20	D40-019-3112	Spring, D40 Piston Return	5
21	210-005	Separator, Kelcel	5
22	210-007	Spring, Ø.850 X .650	5
23	210-006	Spring, Low Pressure Bias	5
24	210-153	Cylinder Housing	1
25	D40-031-2110	Shaft Seal, D40	2

D/G-66 Troubleshooting

Problem	Probable Cause	Solution
Motor/Pump Does Not Operate:	No power.	Supply correct power according to motor requirements.
	Blown fuse/tripped circuit breaker.	Replace/reset, eliminate circuit overload.
	Shaft coupling to pump not in place.	Install proper coupling hardware (see parts list).
	Current overload - motor.	Motor not rated for pump operating conditions - install proper motor.
	Thermal overload - motor.	Motor not rated for pump and/or ambient operating conditions - supply cooling or install proper motor.
	Faulty motor drive/controller.	Repair/replace.
	Faulty motor.	Repair/replace.
	Low liquid level in supply tank (if low-level shut-off is used).	Fill tank.
No Delivery	Supply tank empty.	Fill tank.
	Loss of prime	Re-prime using Initial Start-Up Procedure.
	Inlet line or strainer clogged.	Clear debris and flush, or replace.
	Inadequate supply pressure at pump inlet.	Increase supply pressure by raising fluid level in tank, raising tank, or pressurizing suction tank.
	Inlet line too restrictive.	Increase inlet line diameter and/or decrease inlet line length.
	Fluid viscosity too high.	Reduce viscosity if possible (by heat or some other means). Increase inlet line diameter and/or decrease inlet line length. Increase supply pressure.
	Vapor lock/cavitation.	Increase inlet pressure. Decrease fluid temperature.
	Pump valves held open or worn out.	Clear debris and flush, or replace (see Fluid End Service)
	System relief valve actuating.	Adjust relief valve, or repair, clean, or replace with new relief valve.
Delivery Too Low and/or Erratic	Review all Probable Causes and Solutions in Problem 2 No Delivery above.	
	Air leak(s) in inlet line.	Locate all leaks and repair.
	System back pressure too low.	Adjust back pressure valve to higher setting. Install back pressure valve if none in system.
	Pumped fluid characteristics changed.	Monitor supply tank temperature to determine if fluid is too hot (leading to cavitation) or too cold (increasing fluid viscosity). Stabilize temperature at suitable level to resolve problem. Check for entrapped air in the fluid supply system.
	Inlet supply pressure changed.	Monitor inlet supply pressure (at the pump) to determine if it is too low, causing a starved condition/cavitation. Stabilize pressure at suitable level to resolve problem.
	Oil condition in pump hydraulic end changed.	Check oil level - if low evaluate for source of leakage. Consult factory for hydraulic end service.
		Change oil per recommended guidelines in maintenance section.
Delivery Too High and/or Erratic.	System back pressure too low.	Adjust back pressure valve to higher setting. Install back pressure valve if none in system.
	Inlet supply pressure changed.	Monitor inlet supply pressure (at the pump) to determine if it is too high, causing a “flow-through” condition. Stabilize pressure at suitable level to resolve problem.

D/G-66 Replacement Parts

Ordering Information

1	2	3	4	5	6	7	8	9	10	11	12

A complete D/G-66 Series Model Number contains 12 digits including 9 customer-specified design and materials options, for example: D66XKDGHFEPA.

Digit	Order Code	Description
1-3		**Pump Configuration**
	D/G-66	Shaft-driven
4		**Hydraulic End Cam**
	X	Max 65.7 gpm (248.7 l/min) @ 1000 rpm
5		**Pump Head Version**
	E	SAE Flanges
	K	Kel-Cell NPT Ports or BSPT, ANSI Flanges
6		**Pump Head Material**
	B	Brass
	D	Ductile Iron
	N	Polypropylene (with Hastelloy C followers and follower screws)
	P	Polypropylene (with 316 SST followers and follower screws)
	S	Stainless Steel
7		**Diaphragm & O-ring Material**
	G	FKM Metal Head
	H	FKM Plastic Head
	T	Buna-N Metal Head
	U	Buna-N Plastic Head
8		**Valve Seat Material**
	H	17-4 PH Stainless Steel
	N	Nitronic 50
	T	Hastelloy C
9		**Valve Material**
	F	17-4 Stainless Steel
	N	Nitronic 50
	T	Hastelloy C
10		**Valve Springs**
	E	Elgiloy
	H	17-7 Stainless Steel
11		**Valve Spring Retainers**
	C	Celcon
	M	PVDF
	P	Polypropylene
12		**Hydra-Oil**
	A	10W30 standard-duty oil
	H	15W50 high-temp severe-duty synthetic oil

D/G-66 Warranty

Limited Warranty

Wanner Engineering, Inc. extends to the original purchaser of equipment manufactured by it and bearing its name, a limited one-year warranty from the date of purchase against defects in material or workmanship, provided that the equipment is installed and operated in accordance with the recommendations and instructions of Wanner Engineering, Inc. Wanner Engineering, Inc. will repair or replace, at its option, defective parts without charge if such parts are returned with transportation charges prepaid to Wanner Engineering, Inc., 1204 Chestnut Avenue, Minneapolis, Minnesota 55403.

This warranty does not cover:

1. The electric motors (if any), which are covered by the separate warranties of the manufacturers of these components.

2. Normal wear and/or damage caused by or related to abrasion, corrosion, abuse, negligence, accident, faulty installation or tampering in a manner which impairs normal operation.

3. Transportation costs.

This limited warranty is exclusive, and is in lieu of any other warranties (express or implied) including warranty of merchantability or warranty of fitness for a particular purpose and of any non contractual liabilities including product liabilities based on negligence or strict liability. Every form of liability for direct, special, incidental or consequential damages or loss is expressly excluded and denied.

Wanner Engineering, Inc.

World Headquarters & Manufacturing
Wanner Engineering, Inc
1204 Chestnut Avenue,
Minneapolis, MN 55403 USA
Phone: 612-332-5681 ● Fax: 612-332-6937
Toll-Free Fax (USA): 800-332-6812
Email: sales@wannereng.com
www.Hydra-Cell.com

207 US Highway 281
Wichita Falls, TX 76310 USA
Phone: 940-322-7111
Toll-Free Fax: 800-234-1384
Email: sales@wannereng.com
www.Hydra-Cell.com

Latin American Office
São Paulo, Brazil
Phone: +55 (11) 4081-7098
Email: sales@wannereng.com
www.Hydra-Cell.com

Wanner International Ltd.

Wanner International Ltd
Hampshire - United Kingdom
Phone: +44 (0) 1252 816847
Email: sales@wannerint.co***m***
www.Hydra-Cell.eu

Wanner Pumps Ltd.

Wanner Pumps Ltd.
Kowloon - Hong Kong
Phone: +852 3428 6534
Email: sales@wannerpumps.com
www.WannerPumps.com

Shanghai - China
Phone: +86-21-6876 3700
Email: sales@wannerpumps.com
www.WannerPumps.com

210-991-2400E 5/2016, Revised 1/2018