REV	DESCRIPTION	DATE	ECO	DWN

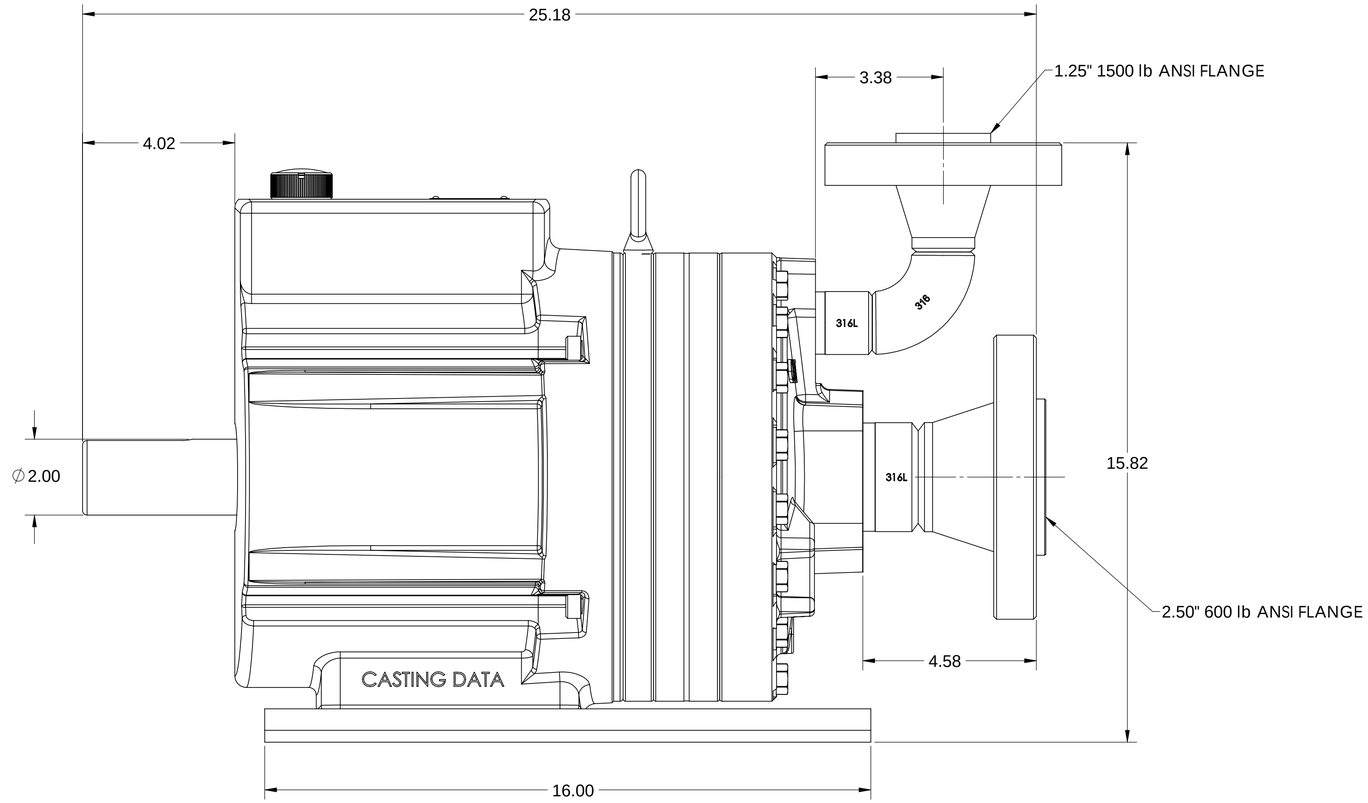

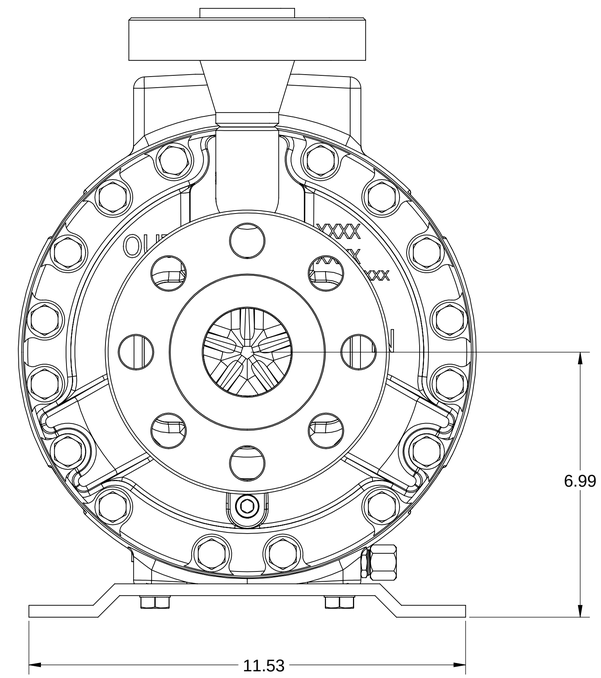

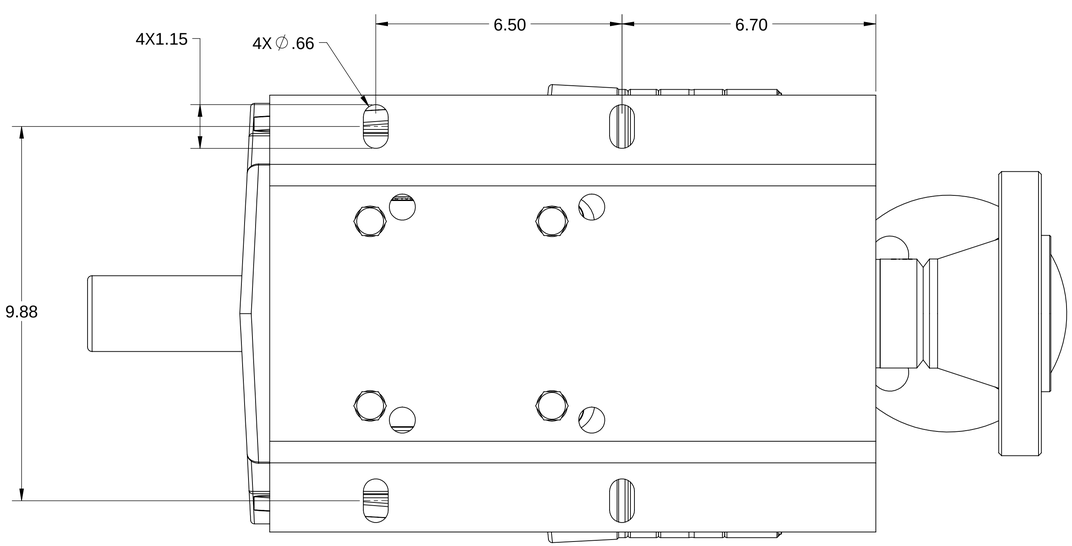

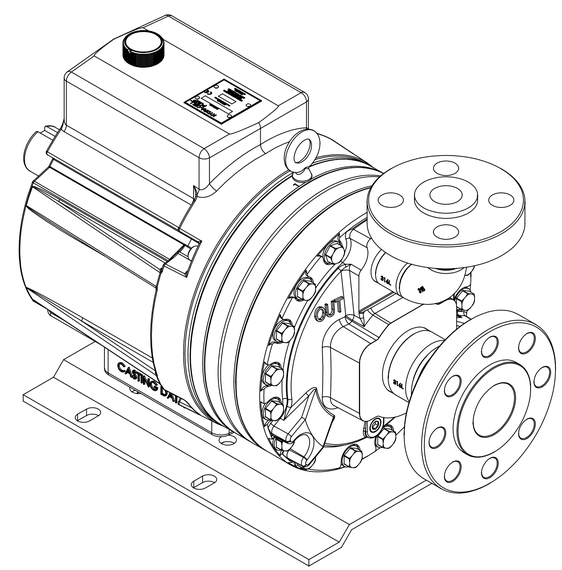

PROPRIETARY STATEMENT:
THIS DOCUMENT CONTAINS CONFIDENTIAL AND PROPRIETARY INFORMATION OF WANNER. IT IS NOT REPRODUCED OR THE INFORMATION CONTAINED THEREIN DISCLOSED TO OTHERS WITHOUT CONSENT, STATED OTHERWISE. ©2014 WANNER ENGINEERING, INC.

MAT'L

UNLESS OTHERWISE SPECIFIED:

-DIMENSIONS ARE IN INCHES.
-INTERPRET DRAWING PER ASME Y14.5-2009.
-DIMENSIONS ARE AFTER PLATING,COATING AND HEAT TREATING, BUT BEFORE PAINTING.
-REMOVE ALL BURRS AND SHARP CORNERS.

TOLERANCES:
.X = ± .1
.XX = ± .02
.XXX = ± .005
ANGLES = ±1°
FINISH: 125

WEIGHT (lbs)
DWN | DATE

THIRD ANGLE PROJECTION

DO NOT SCALE DRAWING

INCH

SCALE: 1:4 | SHEET 1 OF 1

WANNER ENGINEERING, INC.
12204 CHESTNUT AVENUE MINNEAPOLIS, MN 55403

TITLE

DWG NO D35 w 600 x 1500 Ansi Flange

SIZE D

REV