Hydra-Cell® SIMPLY BUILT TO LAST

D-12/G-12 Accessory

Tube Accessory Installation

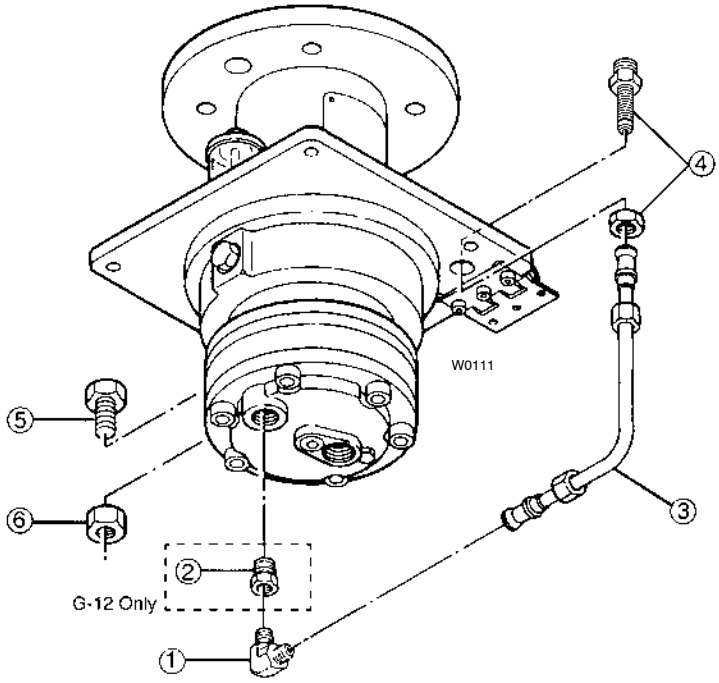

Ref No.	Part Number	Description	Qty
1	D12-112-2210	Elbow, 90°, flare, 3/4” NPT	1
	G12-112-2210	Elbow, 90°, flare, 1/2” BSPT	1
2	G12-122-2210	Bushing, reducer, 1/2” to 3/4” BSPT	1
3	D12-113-1210	Tube Assembly, pressure	1
4	D12-120-2210	Union, bulkhead, NPT, with nut	1
	G12-120-2210	Union, bulkhead, BSPT, with nut	1
5	D12-107-2010	Bolt, hex, 3/4” x 1-1/4”	1
6	D12-106-2010	Nut, hex, 3/4”	1

The Tube Accessory can be installed on either the right or left side of the pump housing.

Tube Accessory (PN A04-007-1200) is used on D-12 pumps with NPT threaded manifolds; (PN A04-009-1200) is used on G-12 pumps with BSPT threaded manifolds.

Refer to the pump Installation/Service Manual (Document D12-991-2400) for additional information on installing the pump into a tank when a Tube Accessory is included.

Assembly Instructions

1. Remove the lock nut from the bulkhead union (4). Insert the bulkhead union into the hole in the pump housing and loosely hand tighten the lock nut (three or four turns). **Do not tighten the lock nut until all tubes and fittings are aligned and secured in the following steps.**
2. Use pipe sealant on the threads of the elbow (1) [and bushing (2) on G-12 version], and tighten into the outlet port of the pump manifold. Align the elbow with the bulkhead union (4).
3. Finger tighten the tube assembly (3) to the elbow (1) and to the bulkhead union (4).
4. Firmly tighten the bulkhead union (4) lock nut to secure the complete tube assembly to the pump housing.
5. Firmly tighten the tube assembly (3) connections to the bulkhead union (4) and to the elbow (1).

NOTE: You may have to do steps 4 and 5 simultaneously to properly fit the tube assembly (3) between the flared ends of the union (4) and the elbow (1).

6. Install the bolt (5) through the empty hole in the housing, and firmly tighten the nut (6).

WANNER ENGINEERING, INC.

1204 Chestnut Avenue, Minneapolis, MN 55403
TEL: (612) 332-5681 FAX: (612) 332-6937
TOLL-FREE FAX [US only]: (800) 332-6812
www.hydra-cell.com email:sales@wannereng.com

©2004 Wanner Engineering, Inc. Printed in USA

D12-991-2403 5/1/04

Hydra-Cell®
SIMPLY BUILT TO LAST

D-12/G-12 Accessory

Valve/Tube Accessory Installation

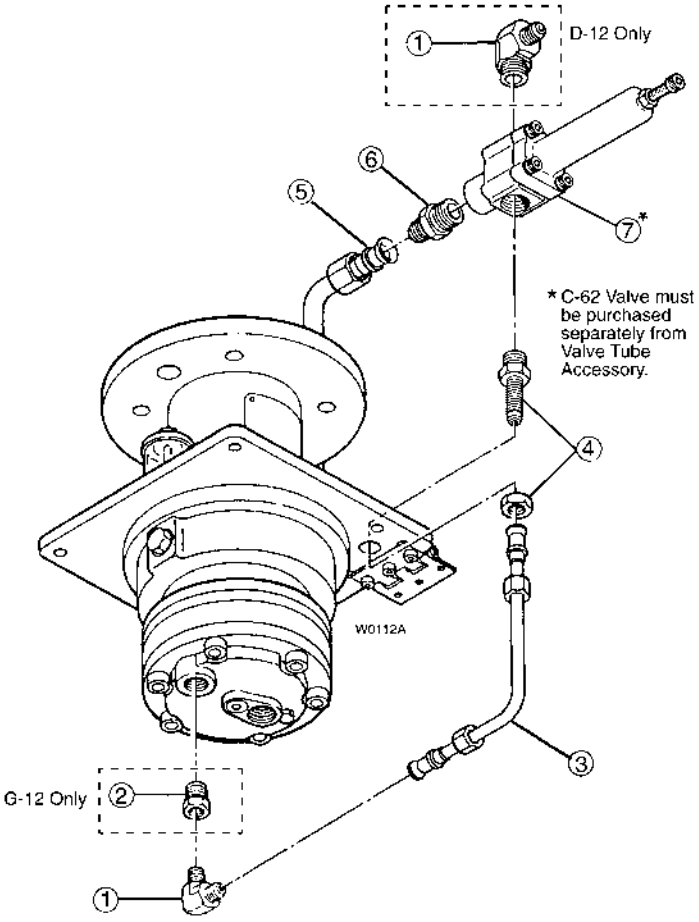

Ref No.	Part Number	Description	Qty
1	D12-112-2210	Elbow, 90°, flare, 3/4" NPT	2
	G12-112-2210	Elbow, 90°, flare, 1/2" BSPT	1
2	G12-122-2210	Bushing, reducer, 1/2" to 3/4" BSPT	1
3	D12-113-1210	Tube Assembly, pressure	1
4	D12-120-2210	Union, bulkhead, NPT, with nut	1
	G12-120-2210	Union, bulkhead, BSPT, with nut	1
5	D12-114-1210	Tube Assembly, bypass	1
6	D12-117-2210	Connector, male, flare, 3/4" NPT	1
	G12-117-2210	Connector, male flare, 3/4" BSPT	1
7	C-62 Valve	[Refer to Valve Parts List for breakdown]	–

The Valve/Tube Accessory can be installed on either the right or left side of the pump housing.

Valve/Tube Accessory (PN A04-008-1200) is used on D-12 pumps with NPT threaded manifolds and C62 A NPT regulating valve; (PN A04-010-1200) is used on G-12 pumps with BSPT threaded manifolds and C62 D BSPT regulating valve.

Refer to the pump Installation/Service Manual (Document D12-991-2400) for additional information on installing the pump into a tank when a Valve/Tube Accessory is included.

Assembly Instructions

1. Use pipe sealant on the threads of the elbow (1) [and bushing (2) on G-12 version], and tighten into the outlet port of the pump manifold. Align the elbow to face the opening in the pump housing that accepts the bulkhead union (4).
2. Use pipe sealant on the threads of the bulkhead union (4), and tighten into the inlet port of the C-62 Valve (7) [ordered separately].
3. Use pipe sealant on the threads of the connector (6), and tighten into the bypass port of the valve (7).
4. (On D-12 Version only), use pipe sealant on threads of the second elbow (1) and tighten into the remaining outlet port of the C-62 Valve (7). Align the elbow toward the valve's adjusting for easier connection to remaining system plumbing.
5. Remove the lock nut from the bulkhead union (4). Insert the bulkhead union into the hole in the pump housing and loosely hand tighten the lock nut (three or four turns). **Do not tighten the lock nut until all tubes and fittings are aligned and secured in the following steps.**
6. Finger tighten the tube assembly (3) to the elbow (1) and to the bulkhead union (4).
7. Slide the long end of the bypass tube assembly (5) through the large hole in the flange of pump housing, and hand tighten with the connector (6).
8. Firmly tighten the bulkhead union (4) lock nut to secure the complete valve/tube assembly to the pump housing.
9. Firmly tighten the tube assembly (3) connections to the bulkhead union (4) and to the elbow (1).

NOTE: You may have to do steps 8 and 9 simultaneously to properly fit the tube assembly (3) between the flared ends of the union (4) and the elbow (1).

10. Firmly tighten the bypass tube (5) to the connector (6).

WANNER ENGINEERING, INC.
1204 Chestnut Avenue, Minneapolis, MN 55403
TEL: (612) 332-5681 FAX: (612) 332-6937
TOLL-FREE FAX [US only]: (800) 332-6812
www.hydra-cell.com email:sales@wannereng.com

©2004 Wanner Engineering, Inc. Printed in USA

D12-991-2404A 5/2004, Revised 8/2006